ELEC2070 2026
Laboratory Questions – Week 2
Analysing DC Circuits and Power Transfer

Solve the following questions in your logbook manually using your own calculator to get used to handwritten assessments. You can discuss the methods with other students and tutors, but it is important to do the solutions yourself. Most of the questions are from the textbooks [1] and [2].

The solutions to the green questions should be written in Laboratory Report 1: Circuits in the Time Domain.

I. Circuits Analysis Using Equivalent Resistances

1. Solve P 2.23 in [2]
   (Answer: $i_1 = 0.938$ A $\;i_2 = 0.469$ A)

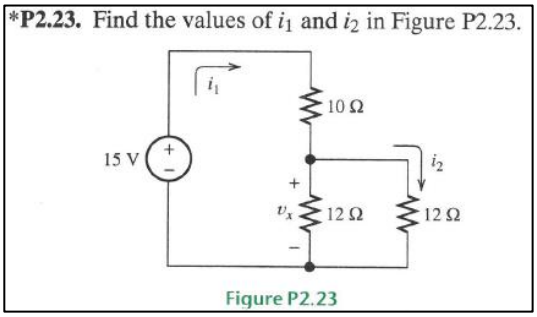

2. Solve P 2.24 in [2]
   (Answer: $v_x = -7.5$ V , $i_1 = -1.5$ A , $i_2 = -0.5$ A , $P_{6\text{A}} = 45$ W absorbing energy, $P_{5\Omega} = 11.25$ W absorbing energy, $P_{15\Omega} = 3.75$ W absorbing energy, $P_{8\text{A}} = 60$ W generating energy)

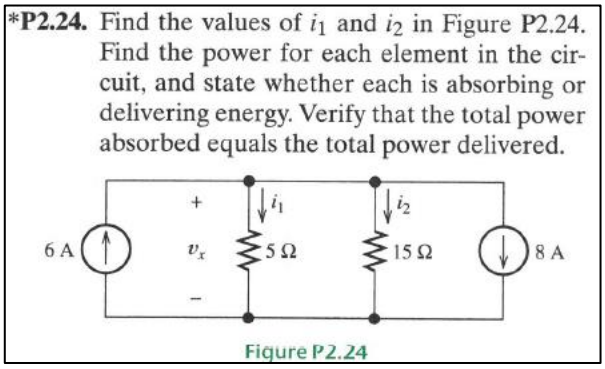

II. Node and Mesh Analysis

3. Solve Exercise 4.2-2 in [1]. Determine the node voltages v_a and v_b, then calculate the powers generated or absorbed by the sources and the 2Ω resistor.
   (Answer: $v_a = -1.33$ V, $v_b = 4$ V, $P_{3\text{A}} = 4$ W generated power, $P_{4\text{A}} = 16$ W generated power, $P_{2\Omega} = 14.2$ W absorbed power)

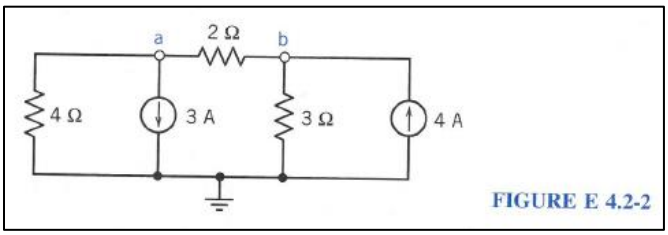

4. Solve Exercise 4.3-2 in [1]. Find the voltages v_a and v_b.
   (Answer: $v_a = 16$ V, $v_b = 8$ V)

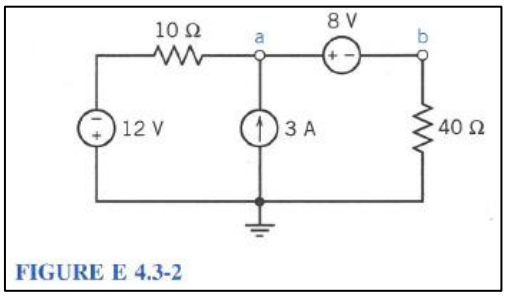

5. Solve P 2.67 in [2]
   (Answer: $i_1 = 1.93$ A , $i_2 = 1.53$ A , $P_{24\Omega} = 3.88$ W absorbed power)

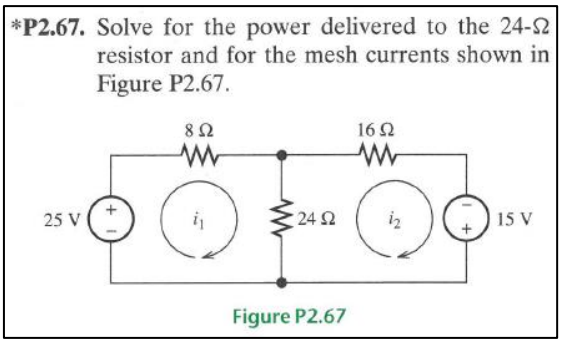

6. Calculate the power generated or absorbed by the dependent source in Fig. 6.
   (Answer: 37.5 mW generated power)

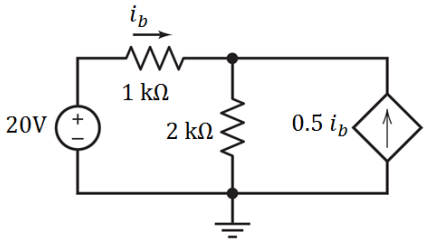

Fig. 6.

III. Thévenin and Norton Equivalents

7. Solve P 2.61 in [2]
(Answer: $R_{eq} = 12\ \Omega$)

P2.61. Find the equivalent resistance looking into terminals a–b for the network shown in Figure P2.61. (*Hint:* First, connect a 1-A current source across terminals a and b. Then, solve the network by the node-voltage technique. The voltage across the current source is equal in value to the equivalent resistance.)

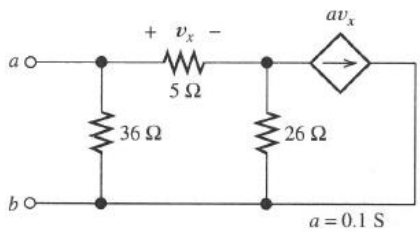

Figure P2.61

8. Solve P 2.85 in [2]
(Answer: $V_{Th} = -15$ V, $R_{Th} = 5\ \Omega$, $I_{No} = 3$ A, no effect)

P2.85. Find the Thévenin and Norton equivalent circuits for the circuit shown in Figure P2.85. Take care that you orient the polarity of the voltage source and the direction of the current source correctly relative to terminals a and b. What effect does the 9-Ω resistor have on the equivalent circuits? Explain your answer.

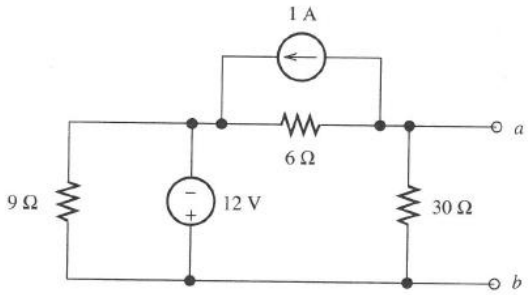

Figure P2.85

9. Solve P 2.89 in [2]
(Answer: $R_{Th} = 37.5\ \Omega$)

P2.89. The open circuit voltage of a certain two-terminal circuit is 15 V. When a 150-Ω load is connected, the voltage across the load is 12 V. Determine the Thévenin resistance for the circuit.

10. Consider a case where the 2Ω resistor in Exercise 4.2-2 [1] is replaced by an unknown component. Find the Thévenin and Norton equivalent circuits seen by the new unknown component. Draw the Thévenin equivalent circuit using the same node names as in the original circuit.
(Answer: $V_{(ab)Th} = -24$ V, $R_{Th} = 7\ \Omega$, $I_{(ab)No} = -3.43$ A)

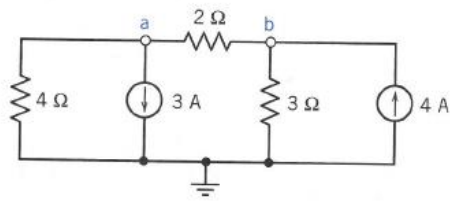

FIGURE E 4.2-2

References

[1] J. A. Svoboda, R. C. Dorf, "Introduction to Electric Circuits 9th edition," Wiley, 2014.

[2] A. R. Hambley, "Electrical Engineering, Principles and Applications, International Sixth Edition," Pearson, 2014.